SPECIFICATION SHEET

COLLECTION: SHOWERING SOLUTIONS
PRODUCT CODE: IND-CMA/RO/4IN-BG

SHOWER TYPE
Shower Arm

COLLECTION NAME
Showering Solutions

FINISH
Bright Gold

GUARANTEE
15 Year Guarantee

MOUNTING
Ceiling Mounted

WITH EASY-FIT BRACKETS
No

tel: 01934 744466
email: sales@vado.com
www.vado.com

WHERE INSPIRATION FLOWS
TAPS | SHOWERS | ACCESSORIES

VADO

SPECIFICATION SHEET

COLLECTION: SHOWERING SOLUTIONS
PRODUCT CODE: IND-CMA/RO/4IN-BG

tel: 01934 744466
email: sales@vado.com
www.vado.com

WHERE INSPIRATION FLOWS
TAPS | SHOWERS | ACCESSORIES
VADO

TECHNICAL DRAWING

COLLECTION: SHOWERING SOLUTIONS
PRODUCT CODE: IND-CMA/RO/4IN-BG

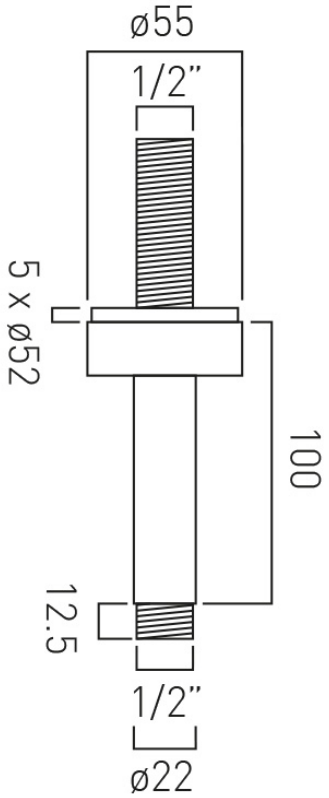

tel: 01934 744466
email: sales@vado.com
www.vado.com

WHERE INSPIRATION FLOWS
TAPS | SHOWERS | ACCESSORIES

VADO